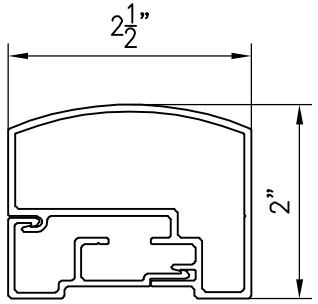


Top Rail RT–100/101

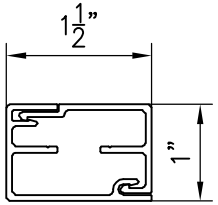


Bottom Rail RB–100/101

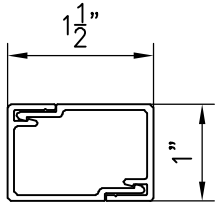


Mid Rail FR–100

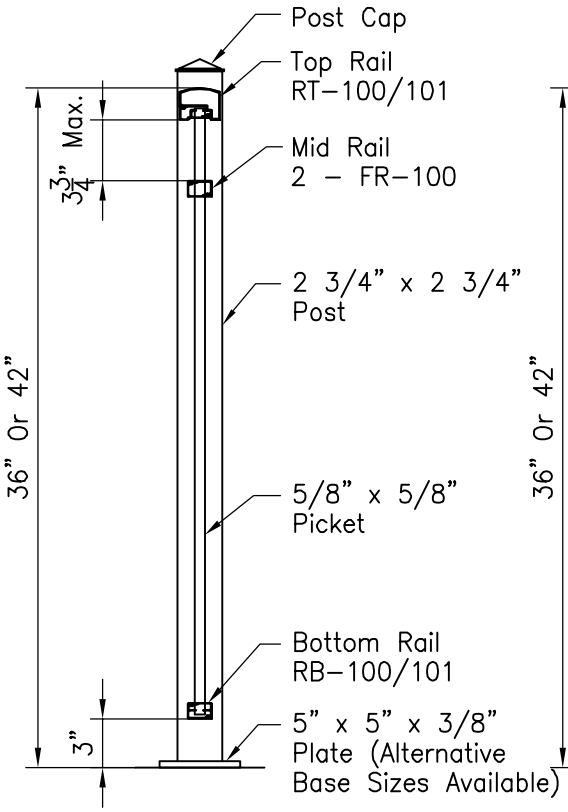


Picket Sections

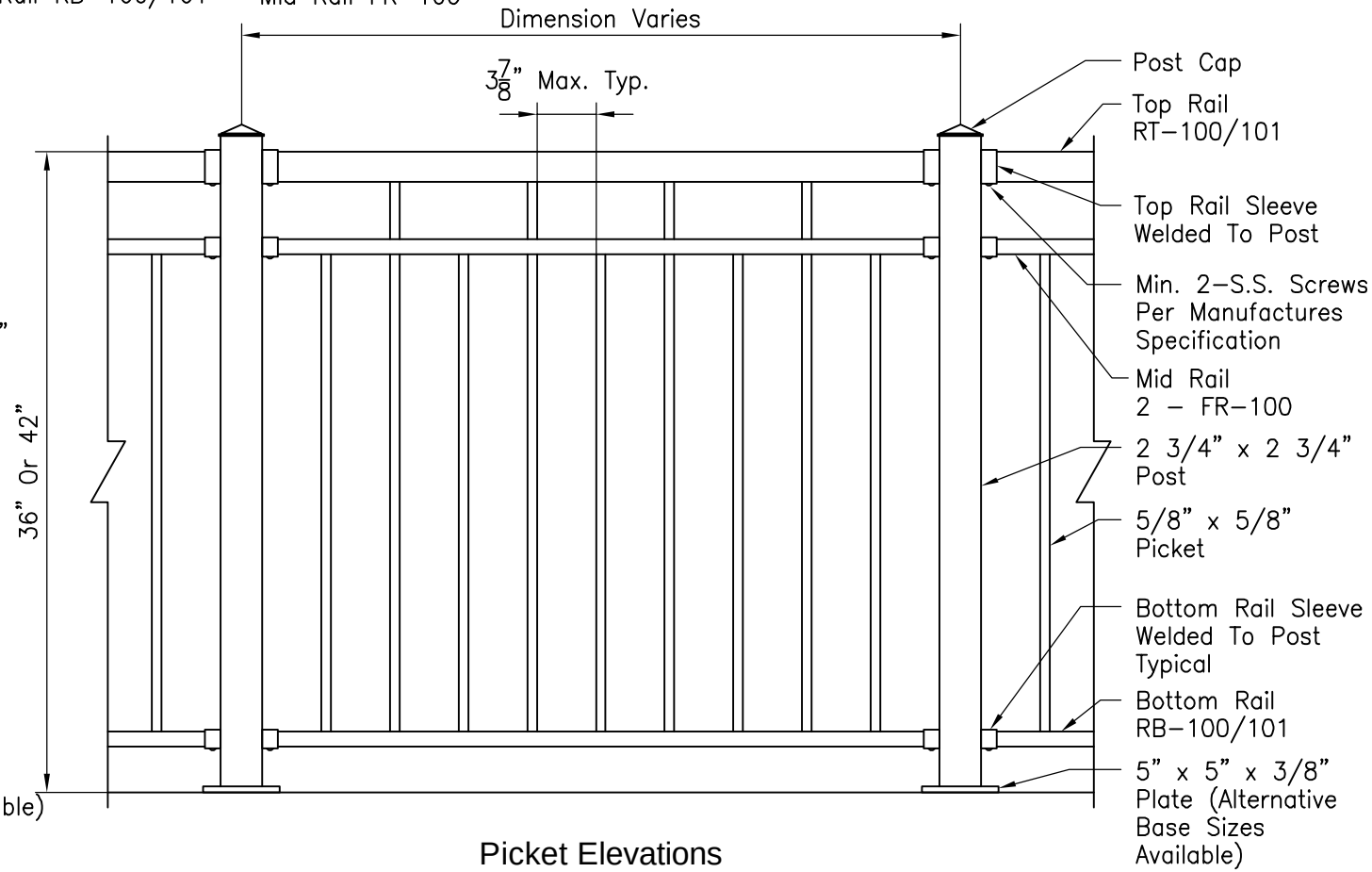


Picket Elevations

| | | | |
|---|---|---|---|
| Title: COLONIAL STYLE BORDEAUX II | Drawing No. SS114 | Scale: 1"=1'-0" | **S.T.A.R.** ***SYSTEM INTERNATIONAL LTD.*** *ALUMINUM RAILING & FENCING* |
| 36" OR 42" High Picket | Drawn By: KK | Date: July 6, 2018 | |
| | Checked By: | Revision: | |